Uflow®
Automation
INDIA

ONE TOUCH FITTINGS
FEMALE RUN TEE

Automation simplified...

Solenoid Valve | Angle Seat Valve | Rotary Coupling
Pneumatic Directional Control Valve | Actuator
Cylinder | One Touch Fitting | Ball Valve
Butterfly Valve

Country of Origin - INDIA

TÜV NORD ISO 9001:2015

Female Run Tee

Specifications

Type	Supply control	Exhaust control
Model	VF52	VF55
Free flow	2 → 1	1 → 2
Controlled flow	1 → 2	2 → 1
Media	Compressed air - Dry / Lubricated	
Operating pressure range	1 - 10 bar	
Ambient Temperature	+5° to +60° C	
Materials of construction	Brass, Acetal, Nitrile	
Applicable tubes	Nylon, Polyurethane	

Features

- Directly mountable on cylinder / valve ports
- Can be rotated by 360°
- Fine regulation of air flow
- Nickel plated body
- Male threads(R) teflon coated
- Elegant design and finish

Application

- These valves are used to control the speed of piston in a pneumatic cylinder.

Function

- These valves allow controlled flow of air in one direction and free flow in the other direction.
- These are available in two versions - a) Supply control version, and b) Exhaust control version.

FEMALE RUN TEE

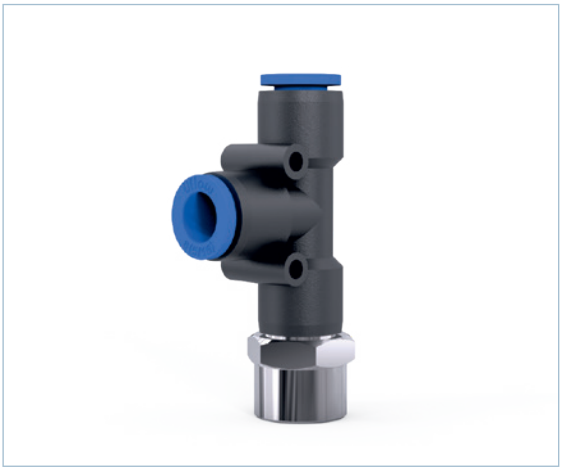

Dimension Drawing (All dimensions in mm)

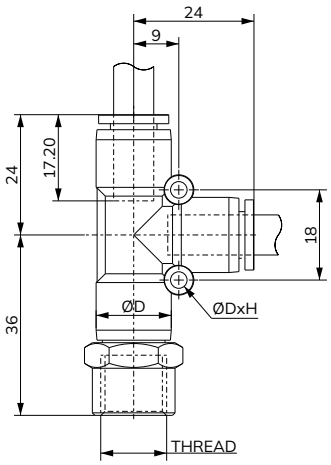

Technical Data

Model No.	Tube OD	Thread	HEX	ØD	L1	L2	L3	C	A	ØdXH
VO3906FV0	6	G1/8	14	13	20	8	28	15	16	3.3 x13
VO3906GV0		G1/4	17	13	20	8	33	15	16	3.3 x13
VO3908GV0	8	G1/4	17	15	22	9	34	18	16	3.3 x15.5

ONE TOUCH FITTINGS IDENTIFICATION CHART

VO	39	16	16	-	-	-	V0

PRODUCT TYPE	
VO	One Touch Fitting
VF	Flow Control

PRODUCT SUB TYPE	
21	Straight Union
22	Different Dia. Straight Union
23	Union Elbow
24	Union Elbow Reducer
25	Union Tee
26	Union Tee Reducer
27	Union 'Y'
28	Union 'Y' Reducer
29	Bulk Head Union
30	Male Connector
31	Bulk Head Female Connector
32	Female Connector
33	Male Elbow
34	Extended Male Elbow
35	Female Elbow
36	Male Branch Tee
37	Female Branch Tee
38	Male Run Tee
39	Female Run Tee
40	Male Branch 'Y'

PRODUCT SUB TYPE	
41	Male Connector (Internal Hexagon Socket)
42	Single Swivel (Internal Hexagon Socket)
43	Single Swivel (Slotted Head)
44	Single Swivel (Hexagon Head)
45	Double Swivel
46	Triple Swivel
47	Multi Distributor Union
48	Multi Distributor Male
49	Cross Union
50	Plug
51	Inline Type Flow Control
52	Supply Type Flow Control
53	Self Sealing
54	Male Straight
55	Exhaust Type Flow Control

APPLICABLE TUBING OD	
Blank	-
16	TO Ø16MM
14	TO Ø14MM
12	TO Ø12MM
10	TO Ø10MM
08	TO Ø08MM
06	TO Ø06MM
04	TO Ø04MM

APPLICABLE TUBING OD	
16	With Applicable Tubing OD Ø16MM
14	With Applicable Tubing OD Ø14MM
12	With Applicable Tubing OD Ø12MM
10	With Applicable Tubing OD Ø10MM
08	With Applicable Tubing OD Ø08MM
06	With Applicable Tubing OD Ø06MM
04	With Applicable Tubing OD Ø04MM

APPLICABLE TUBING OD	
Blank	-
16	TO Ø16MM
14	TO Ø14MM
12	TO Ø12MM
10	TO Ø10MM
08	TO Ø08MM
06	TO Ø06MM
04	TO Ø04MM

APPLICABLE TUBING THREAD	
Blank	-
A	M5X0.8
B	1/8" BSPT
C	1/4" BSPT
D	3/8" BSPT
E	1/2" BSPT
F	1/8" BSP
G	1/4" BSP
H	3/4" BSP
I	3/8" BSP
J	1/2" BSP
K	1" BSP
L	1/8" NPT
M	1/4" NPT
N	3/8" NPT
O	1/2" NPT
P	1/2" BSW (8 ANI)

CONFIGURATION	
Blank	REGULAR
C1	CONFIG 1
C2	CONFIG 2
C3	CONFIG 3
⋮	⋮
C9	CONFIG 9
CA	CONFIG 10
CB	CONFIG 11

VERSION	
V0	VERSION 0
V1	VERSION 1
V2	VERSION 2
V3	VERSION 3
⋮	⋮
V9	VERSION 9
VA	VERSION 10
VB	VERSION 11

VO391616

FLOW CONTROL REGULAR TYPE CONNECTOR WITH APPLICABLE TUBING OD Ø16MM TO Ø16MM

Note : The above chart is for identification purposes only, and it may not be possible to make all combinations for the above chart.

Uflow® Automation INDIA

Global Presence...

Made In India

CONTACT US:

sales@uflowvalve.com +91 851 109 8822 www.uflowvalve.com

Uflow Automation, Ankur Industrial Complex, Sur vey No: 275/276, Plot No: 31, Nr. Intol Cast Pvt. Ltd. Shapar(Veraval) Dist.: Gujarat (India) - 360 024.