Uflow®
Automation
INDIA

PILOT OPERATED PISTON TYPE SOLENOID VALVE

Automation simplified...

Solenoid Valve | Angle Seat Valve | Rotary Coupling | Pneumatic Directional Control Valve | Actuator | Cylinder | One Touch Fitting | Ball Valve | Butterfly Valve

Country of Origin - INDIA

TÜV NORD ISO 9001:2015

Pilot Operated Piston Type Solenoid Valve (Normally Close / Open)

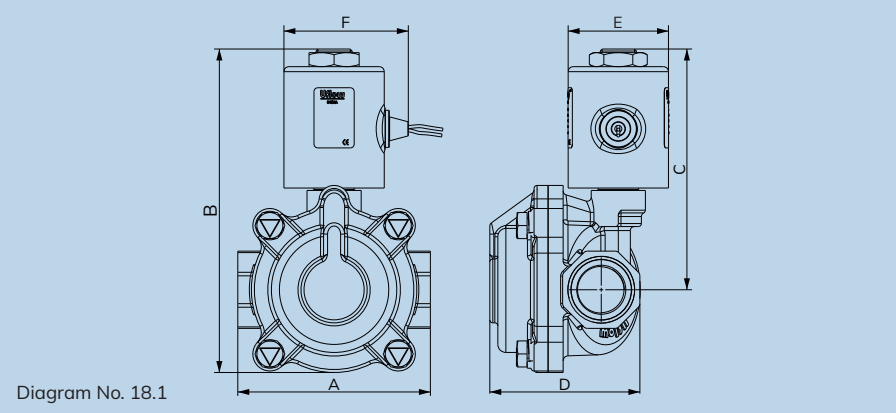

Diagram No. 18.1

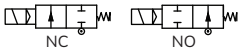

Specifications

Port :	½", ¾", 1", 1¼", 1½" & 2" (Available BSP / NPT)
End Connection :	Screwed / Flange
Body Material :	SS ASTM A351 Grade CF8 / CF8M
Diaphragm :	PTFE + SPL. Viton / PTFE + NBR
Media Temp :	-10°C to 180°C / -10°C to +90°C
Circumstance Temp :	-10°C to 70°C
Media :	Steam, Hot Water, Hot Fluid, Oil
Main Features :	Internal Parts are in superior corrosion resistance steel, (Equivalent to SS316L) Suitable for Food Industries, Pharmaceuticals, Chemical application & Highly corrosive environment.
Operating Voltage :	24AC / 110AC / 230AC / 12DC / 24DC
Power Consumption :	15W / 15W / 15W / 15W / 15W
Coil Features :	High Reliability Unaffected by Voltage Surges. Easy coil changes coil lockable in 4X90 position or freely movable in between as require.
Coil Housing :	IP65 Epoxy square coil, IP65 Metallic round enclosure, IP67 Flameproof enclosure, IP68 Weatherproof enclosure.
Optional Feature :	90% Power saver series also available, Water hammering reducer also available to avoid water hammer forces.
Other Specification Data :	Available on Request.-Manual Override

Dimension - NC (All dimensions in mm)

All Dimensions are approx.

Model No.	Port Size	Diagram No.	A	B	C	D	E	F
HCP209BNIWV0	½"	18.1	67	138	110.5	60	50	63
HCP309BNIWV0	¾"	18.1	81	145.2	112.5	71	50	63
HCP409BNIWV0	1"	18.1	96	161	120	75	50	63
HCP509BNIWV0	1¼"	18.1	108	169.5	123.5	96	50	63
HCP609BNIWV0	1½"	18.1	108	169.5	123.5	96	50	63
HCP809BNIWV0	2"	18.1	132	196	140.8	114	50	63

In normally open valve dimension B&C will increase up to 8mm.

Section View

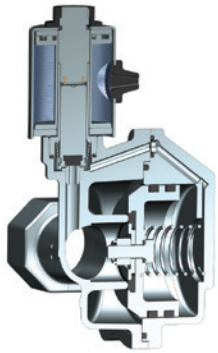

Technical Data

Model No.	Body Material	Pipe (Inch)	Orifice (mm)	Min. Operating Pressure Kg/cm²	Max. Operating Pressure Kg/cm²	Seal & Diaphragm Material	Flow Factor Kv m³ / hr
HCP209BNIWV0	**CF8** / CF8M	½"	17	1.5	12	PTFE	4
HCP309BNIWV0	**CF8** / CF8M	¾"	20	1.5	12	PTFE	7
HCP409BNIWV0	**CF8** / CF8M	1"	25	1.5	12	PTFE	12
HCP509BNIWV0	**CF8** / CF8M	1¼"	36	1.5	12	PTFE	23
HCP609BNIWV0	**CF8** / CF8M	1½"	36	1.5	12	PTFE	23
HCP809BNIWV0	**CF8** / CF8M	2"	47	1.5	12	PTFE	38
HCA254BNIWV0	**CF8** / CF8M	½"	17	4	45	PTFE + NBR	4
HCA354BNIWV0	**CF8** / CF8M	¾"	20	4	45	PTFE + NBR	7
HCA454BNIWV0	**CF8** / CF8M	1"	25	4	45	PTFE + NBR	12
HCA554BNIWV0	**CF8** / CF8M	1¼"	36	4	45	PTFE + NBR	23
HCA654BNIWV0	**CF8** / CF8M	1½"	36	4	45	PTFE + NBR	23
HCA854BNIWV0	**CF8** / CF8M	2"	47	4	45	PTFE + NBR	38

PILOT OPERATED PISTON TYPE SOLENOID VALVE MODEL IDENTIFICATION CHART

H	C	P	2	09	B	N	I	W	-	V0

PRODUCT TYPE	
H	Piston Operated

SEAL MATERIAL	
P	PTFE + SPL. VITON
A	PTFE + NBR

PORT SIZE	
2	½”
3	¾”
4	1”
5	1¼”
6	1½”
8	2”

PRESSURE	
09	1.5 - 12 Bar
54	4 - 45 Bar

PORT CONNECTION	
B	BSP
N	NPT
P	BSPT
F	Flange End
D	Flange End 300#
A	Flat Face Flange End

VALVE POSITION	
N	NC
Z	NO

FEATURES	
W	W/O MOR
M	TURN MOR

CONFIGURATION	
Blank	REGULAR
C1	CONFIG 1
C2	CONFIG 2
C3	CONFIG 3
⋮	⋮
C9	CONFIG 9
CA	CONFIG 10
CB	CONFIG 11

VERSION	
V0	VERSION 0
V1	VERSION 1
V2	VERSION 2
V3	VERSION 3
⋮	⋮
V9	VERSION 9
VA	VERSION 10
VB	VERSION 11

BODY MATERIAL	
C	CF8
M	CF8M
3	CF3M

COIL DIA	
I	18MM AC
J	18MM DC
V	18MM FLP AC
W	18MM FLP DC

HCP209BNIWV0

½" PILOT OPERATED DIAPHRAGM- CF8- PTFE + SPL. VITON- 1.5 TO 12 Bar-BSP-NC-18MM AC- W/OMOR

Uflow® Automation INDIA

Note : The above chart is for identification purposes only, and it may not be possible to make all combinations for the above chart.

Global Presence...

Made In India

CONTACT US:

sales@uflowvalve.com +91 851 109 8822 www.uflowvalve.com

Uflow Automation, Ankur Industrial Complex, Sur vey No: 275/276, Plot No: 31, Nr. Intol Cast Pvt. Ltd. Shapar(Veraval) Dist.: Gujarat (India) - 360 024.